ZPU™-5000

Acquisition and Processing Unit with ZOOM Version 7.4

User's Manual

P/N: 9483-06M1A-240

Safety Information

This product is designed and tested in accordance with EN 61010-1 (2001) standards. The following manual contains information and warnings. They must be followed in order to keep the instrument in a working condition and ensure safe operation

Safety and Electrical Symbols

	Warning - Danger - Identifies conditions or practices that could cause physical harm.
	Caution - Identifies conditions or practices that could result in permanent loss of data or damage the equipment.
	Important Information - Must be read and followed.
~	Alternating current
	GND or earth ground
	Protective conductor terminal
	Electronics common - not linked to earth ground
	Isolated common - not linked to earth ground, nor electronics common
	Shield connection location
CAT I	Overvoltage (installation or measurement) Category 1

NOTICE: Trademarks referenced herein are trademarks and registered trademarks of VibroSystM Inc. or third parties, and are the property of their respective owners. Third party trademarks are used for identification purposes only and shall not be construed as indicative of any relationship or endorsement between VibroSystM Inc. and the third parties.

This manual is provided solely for guidance. VibrosystM Inc. takes no responsibility or liability for any damage caused by accidents, improper installation or misuse. Liability is limited to the repair and/or replacement of defective products.

VibroSystM Inc. 2727 Jacques-Cartier E. Blvd, Longueuil, QC, Canada J4N 1L7 | Phone: 450 646-2157 | U.S. Toll-free Line: 800 663-8379

email: service@vibrosystm.com | www.vibrosystm.com

Safety Precautions

Warning - Danger **Caution**

- **Although most instruments and accessories are normally used at non-hazardous voltage levels, hazardous conditions may still be present in some situations.**
- **This product is intended to be used by qualified operators and maintenance personnel who recognize shock hazards and are familiar with the safety precautions required to avoid possible injury. Carefully read and follow all installation, operation, and maintenance information before using this product.**
- **Install and use this product only as specified in this manual or the protection provided by this instrument might be impaired.**
- **Do not use this product in wet environments.**
- **When in doubt that safety protection has been impaired, make this instrument inoperative and secure it against any unintended operation.**
- **Have this instrument serviced by qualified service personnel only.**
- **To avoid shock hazards, connect the power supply to a properly grounded power source. If a two-conductor power cord is used, a protective grounding wire must be connected between the ground terminal and earth ground before connecting the power cord or operating the instrument.**
- **Never remove the cover or open the case without first turning off the main power source.**
- **Never operate this instrument with the cover removed or the case open.**
- **Use caution when working with voltages above 30 VAC RMS or 42 VDC. These voltages can cause shock hazards.**
- **Only use the replacement fuse(s) specified in this manual.**
- **Do not operate this instrument around explosive gas, vapor, or dust.**

TABLE OF CONTENTS

1. OVERVIEW OF THE ZPU-5000 **7**
1.1 Supported software and types of measurements 7
1.2 Features and functions 8
1.3 ZPU-5000 components 8
1.3.1 ZPU-5000 unit - Front view 9
1.3.1.1 Front panel display 9
1.3.1.2 Keypad 9
1.3.1.3 Front panel LED indicators 9
1.3.1.4 USB port 10
1.3.2 ZPU-5000 unit - Rear view 11
1.3.2.1 Analog I/O modules 11
1.3.2.2 Control module 11
1.3.2.3 Communication module 12
1.3.2.4 Power input 12
1.3.2.5 Protection fuse 12
1.3.2.6 Protective conductor terminal 12

2. INSTALLATION **13**
2.1 Installing the ZPU-5000 in a cabinet or enclosure 13
2.1.1 Connecting the power cord and chassis grounding wire 13
2.1.2 Installing modules in the ZPU-5000 unit 15
2.2 Dual-channel analog I/O modules 16
2.2.1 Analog I/O module - Input 17
2.2.1.1 4 to 20 mA current input modules 17
2.2.1.2 Fiber optic accelerometer (FOA) input modules 18
2.2.1.3 Piezoelectric accelerometer (ICP) input modules 19
2.2.1.4 Voltage input modules 20
2.2.2 Analog I/O module - Outputs 21
2.3 Control module 22
2.3.1 SYNCHRO 1/rev. inputs 22
2.3.2 SYNCHRO 1/rev. output 23
2.3.3 Control inputs 23
2.3.4 Relay driver outputs 25
2.4 Communication module 26
2.4.1 USB Port 26
2.4.2 Ethernet Port 26
2.4.3 RS-485/422 Port 26

3. OPERATION **28**
3.1 Startup (boot-up sequence) 28
3.2 Using the keypad 30
3.3 Overview of the display in monitoring mode 31
3.3.1 View spectral band parameters 32
3.3.2 View air gap parameters 33
3.4 Overview of the options in the Menu mode 34
3.4.1 Import a configuration 35
3.4.2 Export a configuration 35
3.4.3 View information about VibroSystM 36
3.4.4 View the ZPU-5000 system information 36
3.4.5 View the modules information 36
3.4.6 Export alarms 36
3.4.7 View or acknowledge alarms 36
3.4.8 Acknowledge all alarms 36
3.4.9 View System OK information 36
3.4.10 Adjust the front panel brightness 37
3.4.11 Change the power saving option 37
3.4.12 Attribute a unit address 37
3.4.13 Change the IP address protocol (enable or disable DHCP) 37
3.4.14 View or edit communication port settings 37
3.4.15 Select the Network or Standalone mode 38
3.4.16 Create access codes and attribute access rights 38
3.4.17 View or delete existing access codes assigned to users 39
3.4.18 Export log files 39
3.4.19 Restart the unit 40
3.4.20 Uninstall the firmware 40
3.5 Firmware update to version 7.4 with a prepared USB key 40

4. CONFIGURING THE ZPU-5000 WITH ZOOM SOFTWARE **42**
4.1 Module firmware and spectral analysis processing 42
4.2 Processes for Trend outputs 42

5. TROUBLESHOOTING **43**
5.1 Power supply 43
5.2 Boot-up 43
5.3 Network connection 43
5.4 Analog input/output modules 44
5.5 CTRL-100 module 45

1. OVERVIEW OF THE ZPU-5000

The ZPU-5000 is a multi-channel acquisition and processing unit designed for monitoring large rotating units such as turbo-generators, hydroelectric generators, and large motors. Each ZPU-5000 unit can simultaneously monitor up to 16 high-speed parameters.

The modular construction of the ZPU-5000 unit supports up to eight two-channel analog input/output modules. Each analog input/output module accomplishes several functions:

- Applies a selected process on each input signal;
- Detects alarms (performs comparisons between alert and danger threshold levels);
- Determines the alarm type (increasing or decreasing value);
- Controls four alarm relay driver outputs;
- Outputs a processed raw value on two analog outputs (4 to 20 mA, and 0 to 10V);
- Outputs a trend value on two analog outputs (4 to 20 mA, and 0 to 10V).

ZPU-5000 units are usually installed in a network configuration that includes at least a server and a database engine. The network can also include workstations from which users can trigger manual measurements, view in real-time the data collected, or analyze measurements.

The ZPU-5000 can also operate in a standalone configuration for basic real-time monitoring. In standalone mode, the ZPU-5000 unit uses relay driver outputs to transmit notifications of alarm.

1.1 Supported software and types of measurements

Important Information
• The information presented throughout this manual applies to ZOOM version 7.4 only.

When installed in a network configuration, ZPU-5000 units are linked to a server for connection to a database, and to establish communication with other equipment. All operations are managed through ZOOM software services:

ZOOM Server	to connect the ZPU-5000 unit to the database and to other ZOOM software components.
ZOOM Application	to transmit the user's commands for triggering measurements, display data through real-time graphic displays, and provide software tools for analysis.
ZOOM Configuration & ZOOM Update	to make configuration changes and transmit firmware updates that will be stored in the ZPU-5000 internal memory.

The internal memory of a ZPU-5000 unit also supports the firmware and tables needed by four ZOOM data acquisition and communication services:

Available plug-ins	ZOOM ZPU5000
	ZOOM ThermaWatch® Stator
	ZOOM Modbus®
	ZOOM OPC

ZPU-5000 units collect data in one of four measurement types:

Possible Measurements	Pole
	Sampling
	Trending
	Alarm

1.2 Features and functions

The ZPU-5000 executes various types of measurements in both automatic and manual mode, and transmits information to the server running the ZOOM software for rapid display and analysis of collected data.The ZPU-5000 uses high-speed TCP/IP communication protocols to communicate with the server.

The ZPU-5000 can synchronize the acquisition of all parameters with the passing of each rotor pole for salient pole units. It tracks up to 16 high speed inputs (air gap, displacement, vibration, etc.) from standstill to over-speed conditions. It is also possible to interconnect additional ZPUs to extend monitoring range and capabilities.

The ZPU-5000 is linked via its 10/100 Mbps Ethernet port to a network that includes the server. It can also be operated locally in a standalone configuration without connection to a server.

1.3 ZPU-5000 components

A complete ZPU-5000 unit is made of:

- one ZPU-5000 processing unit
- one control module
- one communication module
- at least one (and up to eight) analog/digital acquisition module

1.3.1 ZPU-5000 unit - Front view

The front panel user interface includes a front panel display, a seven-button keypad, four LED indicators, and one USB port.

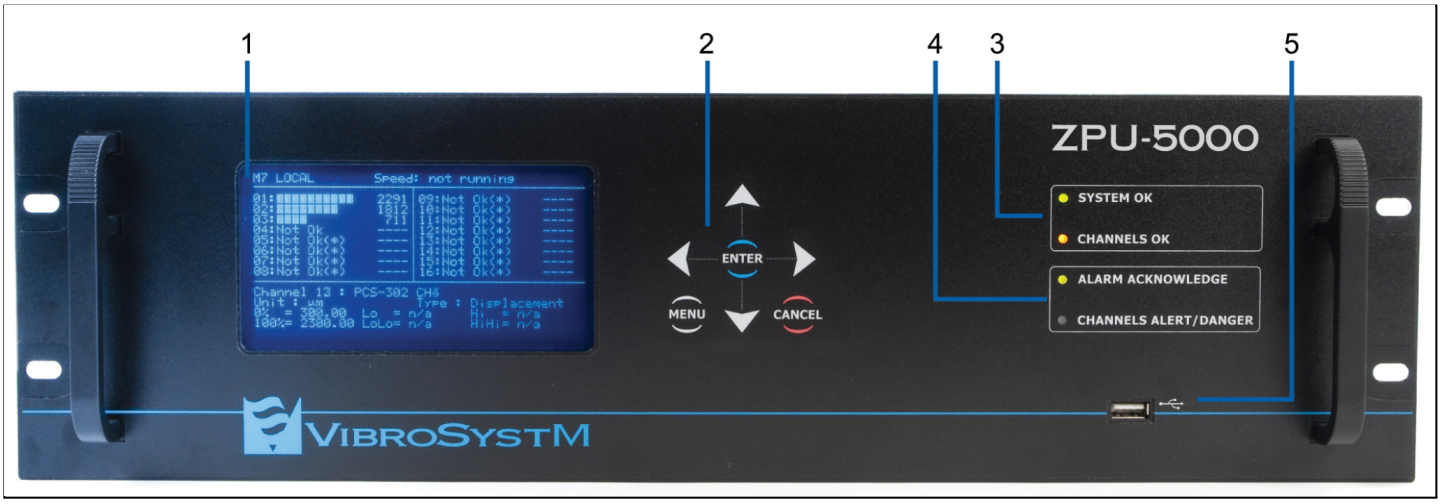

1.3.1.1 Front panel display

The front panel display shows messages on a 256 x 128 dot grid. In **Menu** mode, the display shows configuration information. In **Monitoring** mode, the display shows real-time measurement values, text and bar graphs.

1.3.1.2 Keypad

The 7-button keypad allows browsing through the various displays.

1.3.1.3 Front panel LED indicators

- **ALARM ACKNOWLEDGE** provides a visual notification that a new alarm has been triggered.
  - Turns **Orange** upon startup, then turns **Green** to confirm that no new alarm has been triggered and that all prior alarms have been acknowledged.
  - Turns **Orange** when an event has triggered an alarm awaiting to be acknowledged.
- **CHANNELS ALERT/ DANGER** provides an instant visual notification of preset alarm threshold violations on selected processed input channels.
  - Turns **Red** upon startup, then turns **OFF** until an alarm event occurs.
  - Turns **Yellow** when an alert type event (a measurement has reached the first threshold) has occurred and remains **Yellow** as long as the alert condition remains.
  - Turns **Red** when a danger type event (a measurement has reached the second threshold) has occurred and remains **Red** as long as the alert condition remains.
- **SYSTEM OK** confirms the operational status of the ZPU-5000 and of its interactions with the ZOOM system.

- Turns **Yellow** upon startup, then turns **Green** as long as the system is operating correctly.
- **Green** indicates that the ZPU-5000 is properly connected to its ZOOM ZPU5000 service through the ZOOM server.
- Turns **Orange** when a system component malfunction occurs, such as a ZOOM plug-in interruption, a network connection error, or other malfunction type.
- Flashes **Yellow** while files are copied from a USB key, and turns **Yellow** once the copying process is completed.

CHANNELS OK confirms the integrity of the measuring chains (sensors and cables) and of the input of all analog I/O modules.

- Turns **Yellow** upon startup, then turns **Green** after the firmware has completed the boot-up sequence and all measuring chains are confirmed as functional.
- Remains **Green** as long as all measuring chains are functional.
- Turns **Orange** when one measuring chain or more becomes saturated (defective sensor, faulty connection).

1.3.1.4 USB port

The USB port allows connection of a portable storage device to copy or save the configuration or update the firmware. An entire system configuration and system firmware can be stored on the drive to be copied or upgraded. The drive can be inserted into the USB port while the unit is running.

Important Information
• U3 USB smart drives are not compatible with the ZPU-5000's operating system. Apart from this restriction, any portable USB flash drive formatted to FAT32 can be used.

A storable system configuration includes:

• System related information: - Analog input/output firmware; - Control module firmware; - Operating system; - All plug-in installations.	• Analog input/output parameters: - Input sensor type; - Input range; - Input units of measurement; - Processing; - Output range; - Output units; - Alarm thresholds.

1.3.2 ZPU-5000 unit - Rear view

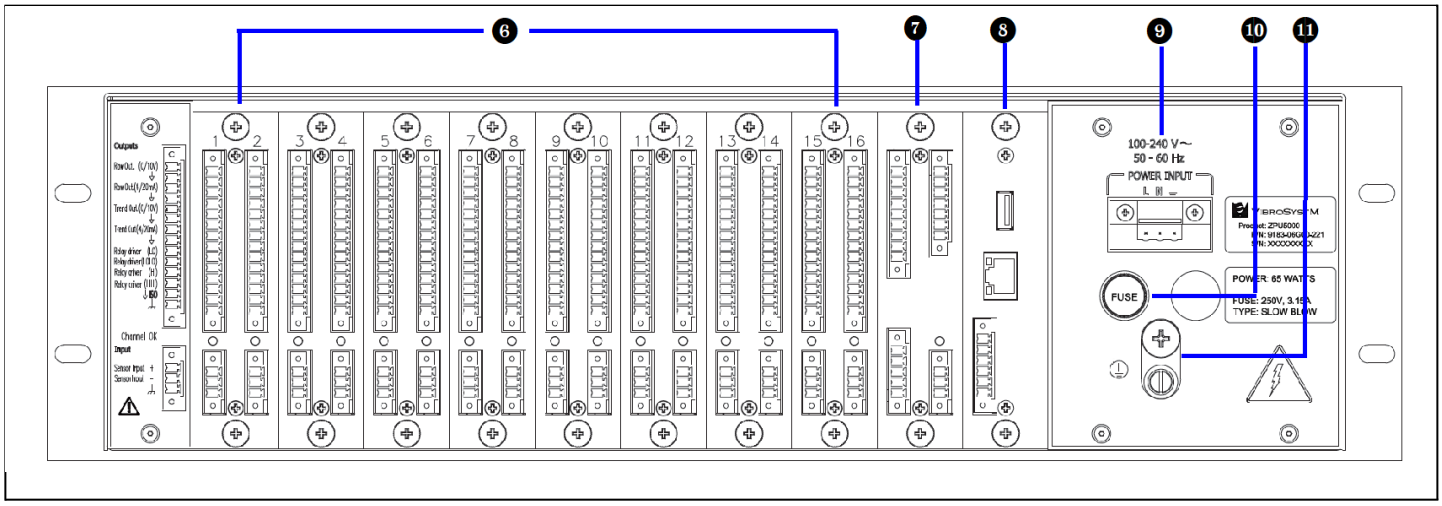

Terminal block connectors with removable female screw terminal connectors allow permanent wiring of cable harnesses with the advantage of quick connect/disconnect.

Format	Location	Recommended Wire Size
3-pos.	ZPU-5000 Power Input	1,5 mm^2 *[16 AWG]* (300 V rating)
1-pos.	ZPU-5000 Protective Conductor Terminal	1,5 mm^2 *[16 AWG]*, up to 6 mm^2 *[10 AWG]*
3-pos.	Analog I/O Modules	0,5 - 0,34 mm^2 *[20 - 22 AWG]*
14-pos.	Analog I/O Modules	0,5 - 0,34 mm^2 *[20 - 22 AWG]*
6-pos.	Communication Module	0,5 - 0,34 mm^2 *[20 - 22 AWG]*
4-pos.	Control Module	0,5 - 0,34 mm^2 *[20 - 22 AWG]*
5-pos.	Control Module	0,5 - 0,34 mm^2 *[20 - 22 AWG]*
7-pos.	Control Module	0,5 - 0,34 mm^2 *[20 - 22 AWG]*
9-pos.	Control Module	0,5 - 0,34 mm^2 *[20 - 22 AWG]*

1.3.2.1 Analog I/O modules

Up to eight dual-channel analog I/O modules can be present to receive and process signals from various sensors and conditioners. Each channel also provides four analog outputs and four open-collector outputs for controlling remote alarm relays.

1.3.2.2 Control module

One control module is dedicated to the management of the control and synchronization signals for the ZPU-5000 unit. Related inputs and outputs include:

- Synchronization inputs;
- Synchronization output;
- Alarm inhibit;
- External trigger;
- Acquisition trigger;
- Rotation;
- “System OK” relay driver;
- “Channels OK” relay driver;
- Two relay drivers for optional configurations (configurable in the ZOOM software).

1.3.2.3 Communication module

This module enables communication to various instruments:

- One Ethernet 10/100 Mbps port for communication with a server;
- One USB port (same function as the one on the front);
- One serial port for half-duplex RS-485 (TWS and Modbus RTU) or full-duplex RS-422 (Modbus RTU) communication.

1.3.2.4 Power input

A 3-position removable female type screw terminal connector allows power input wiring. The ZPU-5000 unit should be installed in compliance with national and local electrical standards.

1.3.2.5 Protection fuse

The ZPU-5000 acquisition unit is protected by a fuse accessible from outside the back panel. Replace only with the same type of fuse: 3.15A / 250V slow-blow, 5x20 mm.

1.3.2.6 Protective conductor terminal

The protective conductor terminal on the rear panel must be connected to a grounding point in compliance with local regulations. Grounding through the protective conductor terminal is essential for safety purposes. It also provides better efficiency against ESD and EMI disturbances.

2. INSTALLATION

ZPU-5000 units are usually delivered pre-installed and pre-cabled inside a cabinet. ZPU5000 units can also be ordered separately as an addition to an existing installation. When ZPU-5000 units are added to a standard cabinet from VibroSystM, pre-wired harnesses are available.

2.1 Installing the ZPU-5000 in a cabinet or enclosure

The following guidelines will help you plan your equipment cabinet configuration:

- Allow sufficient clearance around the cabinet or enclosure for maintenance;
- Make sure the internal temperature inside the enclosure does not exceed 50°C [122°F];
- Cables must be kept away from electrical noise sources, such as power lines and fluorescent lighting fixtures.
- Keep signal cables separated from power cables;
- The unit must be kept away from electrically conductive dust, water or moisture;
- When mounted in an enclosed cabinet, it is suggested to allow a space of at least 5 1/4” (3U) above each component for ventilation;
- Side support angles are required to install the unit in a cabinet.

2.1.1 Connecting the power cord and chassis grounding wire

⚠ Warning - Danger ⚠ Caution
• The ZPU-5000’s power supply and grounding connection should be installed in accordance with national and local electrical norms. • To ensure protection, the chassis grounding wire (protective conductor terminal) must be of a gauge heavier or equal to the gauge of the AC input wires.

The protective conductor terminal must be connected to a grounding point in compliance with local regulations. Grounding is essential for safety purposes as well as to provide better efficiency against ESD and EMI disturbances.

For safety purposes, a 15A circuit breaker should be included in the circuit supplying power to the ZPU-5000. Several instruments may be connected to a circuit protected by a circuit breaker, but each instrument must have its own disconnect device.

A 3-position panel header and a mating connector are provided for power input.

* Note: Newer models of ZPU-5000 units are protected by a single fuse, and are offered in various AC and DC power input ranges.

2.1.2 Installing modules in the ZPU-5000 unit

Modules of the correct type must be placed in the correct slots. Slot 9 is dedicated to the Control module, and slot 10 is dedicated to the Communication module. Slots 1 to 8 are reserved for Analog I/O modules and the location of each must match the ZPU-5000 Hardware Configuration form.

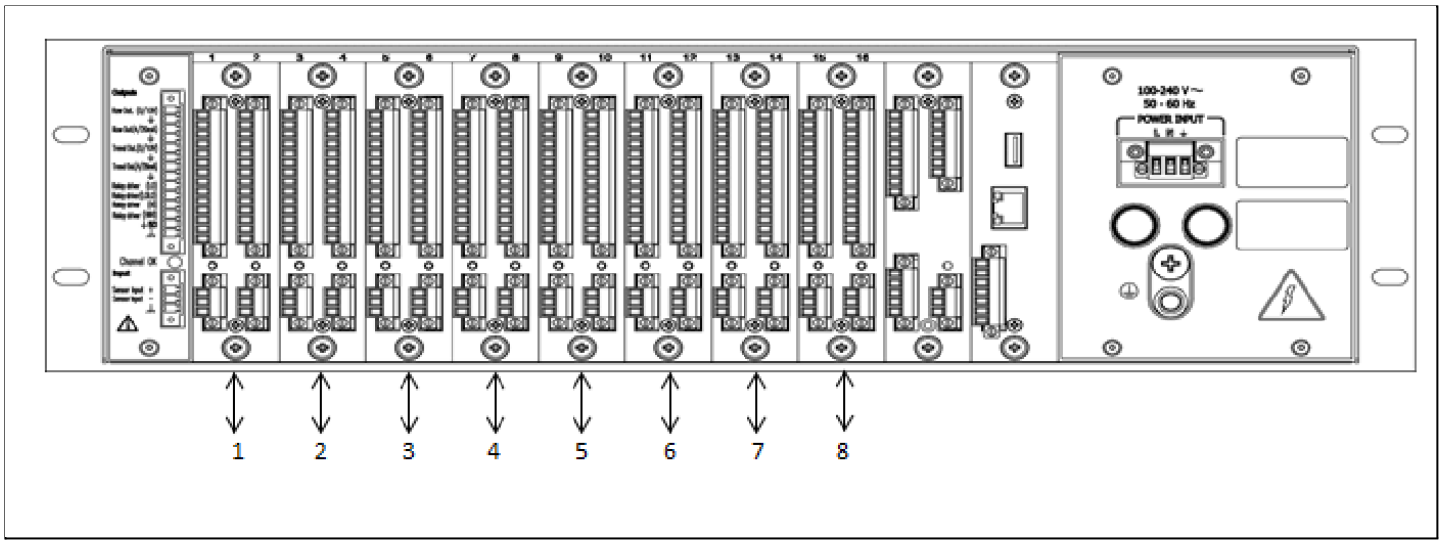

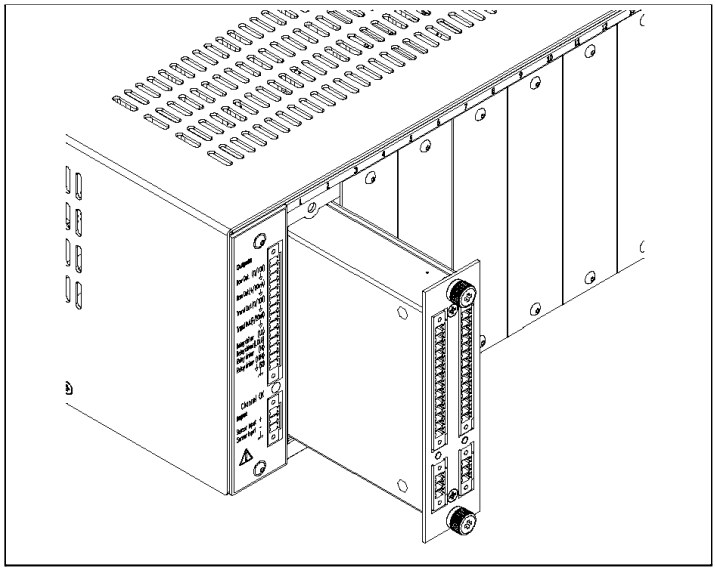

To install a module, carefully align the module in the top and bottom guide rails, push the module in the ZPU-5000, and tighten the two thumb screws.

2.2 Dual-channel analog I/O modules

Dual-channel analog I/O modules convert input signals according to selected processes and generate corresponding analog signals. All analog I/O modules have the same pinout, but each module is factory-configured for a specific input source.

Important Information

- The processed raw output does not correspond to the sensor's signal: the frequency content of the processed raw output signal is present, but is adapted according to the sensor configuration as set with the ZOOM Configuration software.
- The modules do not supply power to the measuring chains. An external power supply is required.

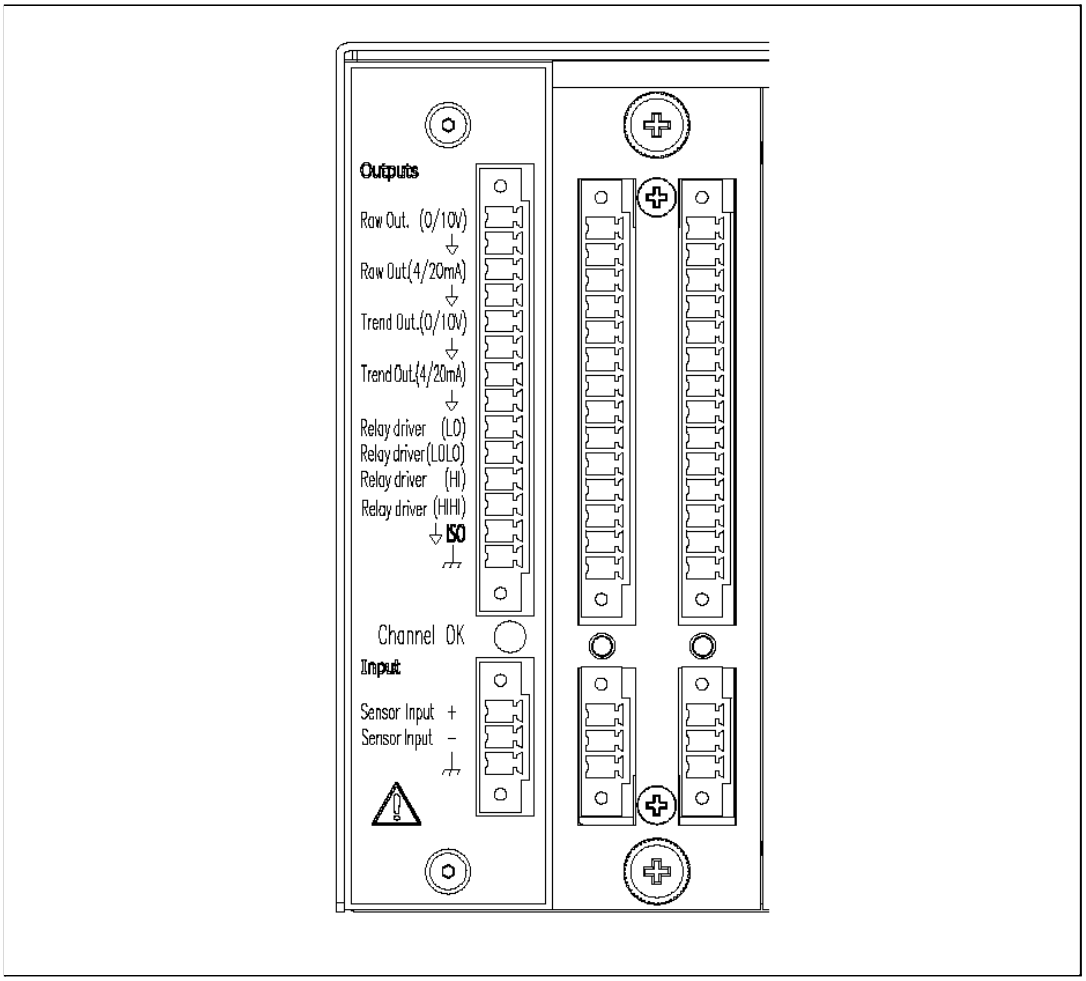

2.2.1 Analog I/O module - Input

Each channel received an input signal on a 3-position panel header with a mating connector. Each module is factory-configured for a specific input source.

2.2.1.1 4 to 20 mA current input modules

Module	Input Range	Maximum Processed Range (BW)
AGM-4/20	4 to 20 mA	According to Air Gap Measuring Chain (DC to 1000 Hz)
CIM-4/20	4 to 20 mA	According to Measuring Chain (DC to 1000 Hz)

Connection

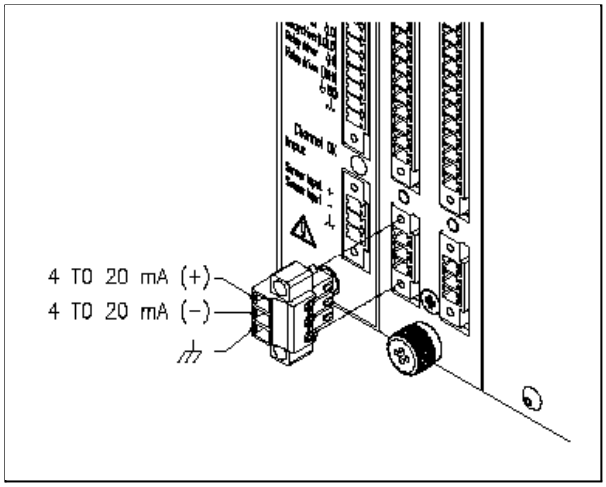

Input channel characteristics

- Input impedance: 200 Ω

Jumpers on the circuit allow a grounded or ungrounded **4 to 20** mA loop.

Important Information

- Modules are shipped with JP1 and JP2 jumpers installed.

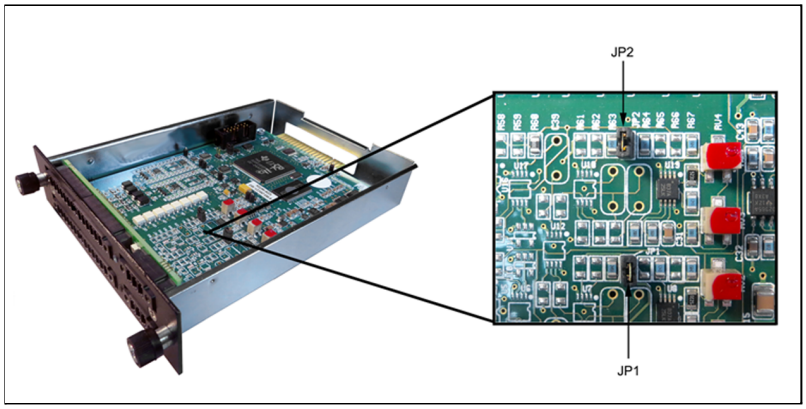

JP2 - Channel 1: jumper installed = grounded
jumper removed = ungrounded
JP1 - Channel 2: jumper installed = grounded
jumper removed = ungrounded

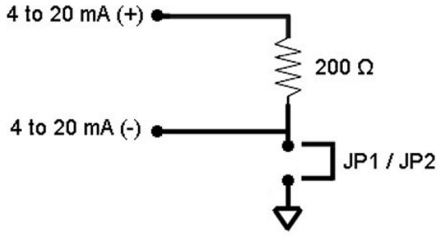

2.2.1.2 Fiber optic accelerometer (FOA) input modules

Module	Input Range	Input Sensitivity	Maximum Processed Range (BW)		
			Acceleration	Velocity	Displacement
FIM-40-100	0 to 40 g Peak	100 mV/g	40 g Peak (15 to 1000 Hz)	100 mm/s Peak (30 to 1000 Hz)	2000 µm Peak to Peak (30 to 1000 Hz)
FIM-40-100(LF)	0 to 40 g Peak	100 mV/g	(not applicable)	30 mm/s Peak (10 to 1000 Hz)	(not applicable)

Connection

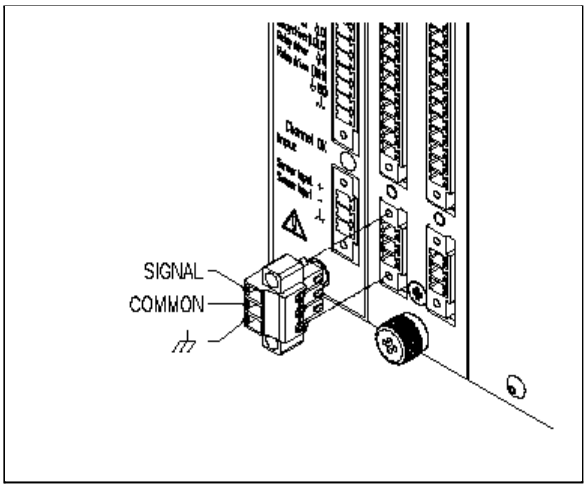

2.2.1.3 Piezoelectric accelerometer (ICP) input modules

Module	Input Range	Input Sensitivity	Maximum Processed Range (BW)		
			Acceleration	Velocity	Displacement
ICPM-1.13-500	1.13 g Peak	500 mV/g	1.13 g Peak (0.7 to 1000 Hz)	28 mm/s Peak (0.7 to 1000 Hz)	2000 µm Peak-to-Peak (0.7 to 1000 Hz)
ICPM-5.65-500	5.65 g Peak	500 mV/g	5.65 g Peak (0.7 to 1000 Hz)	56 mm/s Peak (0.7 to 1000 Hz)	2000 µm Peak-to-Peak (0.7 to 1000 Hz)
ICPM-1.13-100	1.13 g Peak	100 mV/g	1.13 g Peak (0.7 to 1000 Hz)	28 mm/s Peak (0.7 to 1000 Hz)	2000 µm Peak-to-Peak (0.7 to 1000 Hz)
ICPM-5.65-100	5.65 g Peak	100 mV/g	5.65 g Peak (0.7 to 1000 Hz)	28 mm/s Peak (0.7 to 1000 Hz)	2000 µm Peak-to-Peak (0.7 to 1000 Hz)

Connection

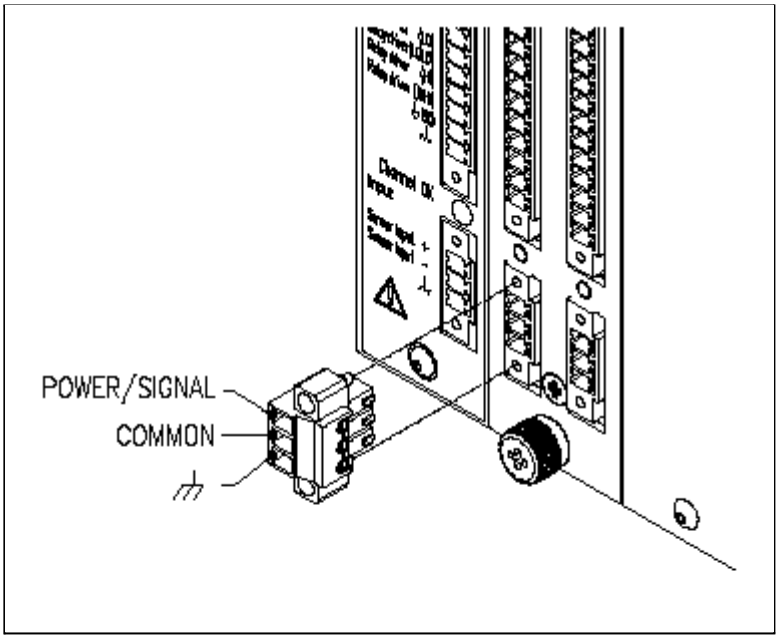

2.2.1.4 Voltage input modules

Module	Input Range	Maximum Processed Range (BW)
VIM 0/+5	0 to 5 V	According to Measuring Chain (DC to 1000 Hz)
VIM -5/+5	-5 to 5V	According to Measuring Chain (DC to 1000 Hz)
VIM 0/10	0 to 10 V	According to Measuring Chain (DC to 1000 Hz)
VIM -10/+10	-10 to 10 V	According to Measuring Chain (DC to 1000 Hz)
VIM -2/-18	-2 to -18 V	According to Measuring Chain (DC to 1000 Hz)

Connection

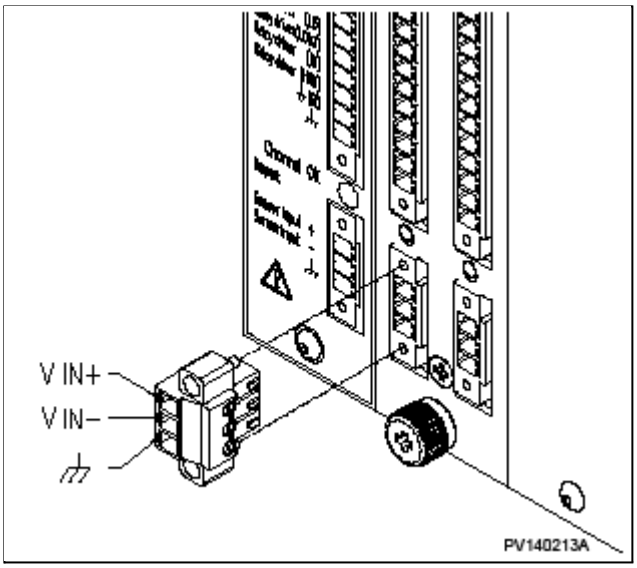

2.2.2 Analog I/O module - Outputs

Each channel supports eight output signals on a 14-position panel header with a mating connector.

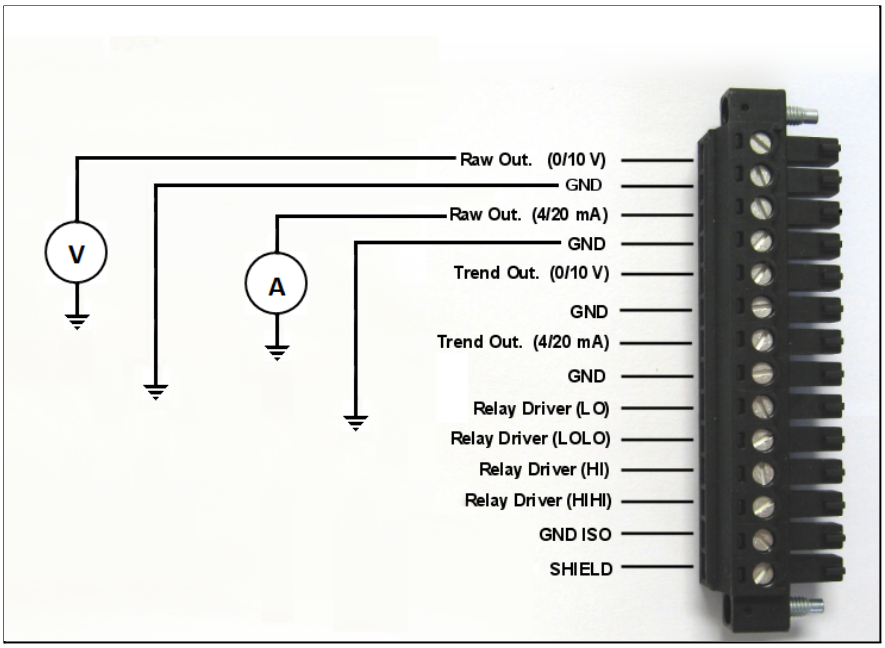

- **Raw Out:** Analog outputs that represent the processed raw signal from the sensor on the corresponding input channel.

Important Information
• Raw and Trend outputs (4/20 mA) do not require power from an external source.

- **Trend Out:** Analog outputs representing the selected processed signal from the sensor on the corresponding input channel.
  - Voltage Output (Raw, and Trend)
    - Output range: 0 to 10V
    - Load: 10 kΩ min.
    - Processing range: According to ZOOM Configuration
  - Current Output (Raw, and Trend)
    - Output range: 4 to 20 mA
    - Load: 500 Ω max.
    - Processing range: According to ZOOM Configuration

- Relay Driver Outputs

Important Information
• Relay driver outputs require power from an external source.

- Output type: Bipolar FET, ± 30V / 25 mA max. isolated ground
- Output state: Transistor **OFF** = no alarm
  Transistor **ON** = alarm detected

2.3 Control module

The control module manages four types of signal:

- Synchro. 1/rev. probe inputs;
- Synchro. 1/rev. probe output;
- Control Inputs;
- Relay driver outputs.

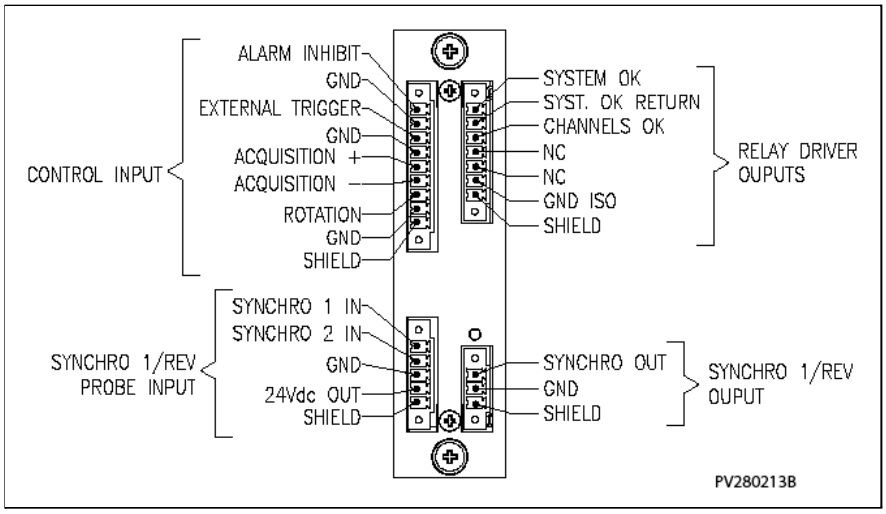

2.3.1 SYNCHRO 1/rev. inputs

These inputs receive a synchro 1/rev. signal from one synchronization probe installed on a unidirectional unit, or two synchronization probes installed on a bi-directional unit, such as a pumped-storage generator. The ROTATION input signal determines which synchro 1/rev. signal input is active on a bi-directional unit. A closed contact on the ROTATION input sets SYNCHRO 1 IN as the active input, while an open contact on the ROTATION Input sets SYNCHRO 2 IN as the active input.

In the ZOOM Configuration software, the *Automatic Direction Detection* setting can be configured and the *Rotation Direction* can be associated when the rotation control input contact is closed either in a clockwise or counterclockwise position. It is also possible to adjust the synchronization pulse threshold for a probe with a voltage output instead of a transistor output.

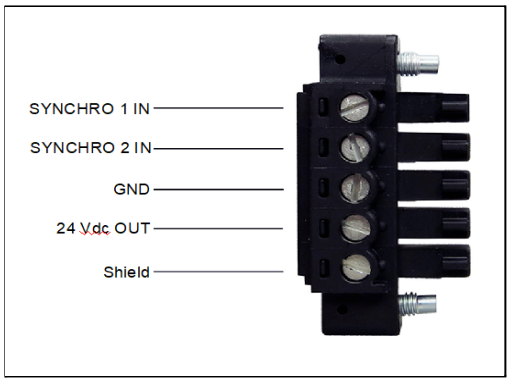

- Synchro signal inputs (2 x);
  Input type: pull up to 24Vdc;
  Control type: NPN open collector proximity switch.
- 24 Vdc output to power the synchronization probe(s).

2.3.2 SYNCHRO 1/rev. output

Use the signal from this output to view the synchro 1/rev. pulse on an instrument other than the ZPU-5000.

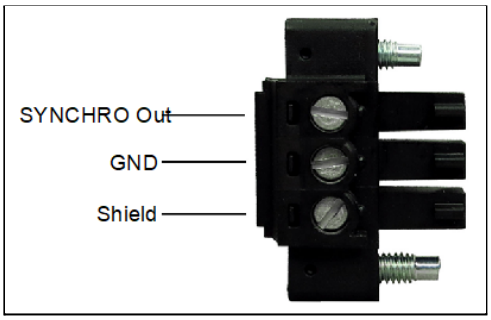

- Output type: NPN collector with resistor pull-up to 5 V

2.3.3 Control inputs

The control inputs receive signals from remote switching devices for the control of four system features.

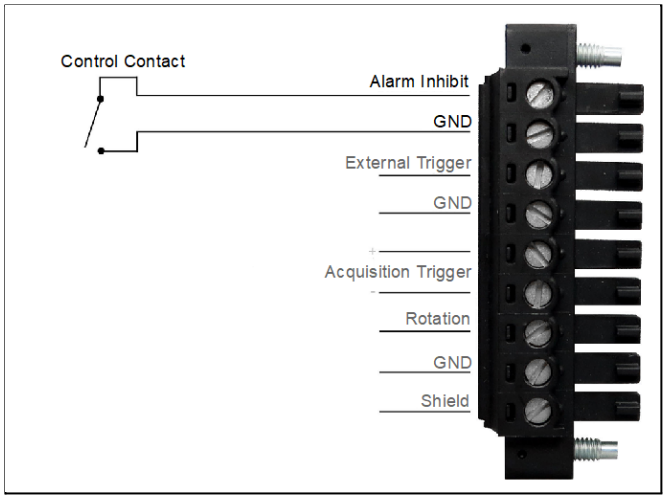

1. **Alarm Inhibit**: an input used to disable all alarm functionalities;
   - Input type: 10 kΩ pull up resistor to 24 Vdc;
   - Control Type: dry contact or electronic switch.
     Control contact: open = alarm enabled;
     Control contact: closed = alarm disabled.
   - Voltage threshold: 3.7 V

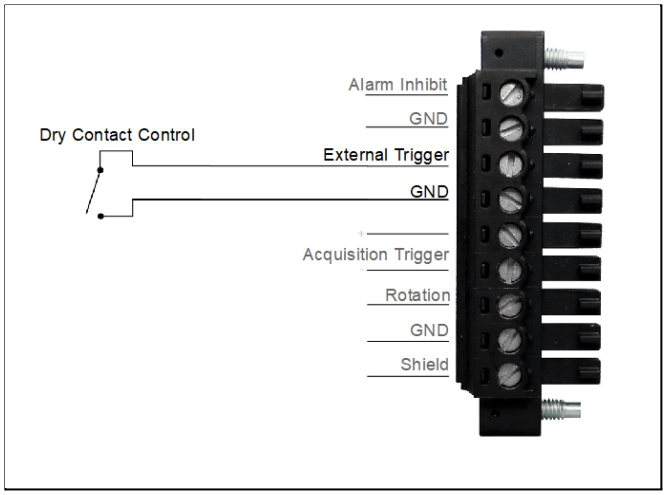

2. **External Trigger**: An input used to start a sampling or pole measurement. The measurement type can be selected in the ZOOM Configuration software.
   - Input type: 10 kΩ pull up resistor to 24 Vdc;
   - Control type: dry contact or electronic switch.
     Triggers on a falling edge.
   - Voltage threshold: 3.7 V

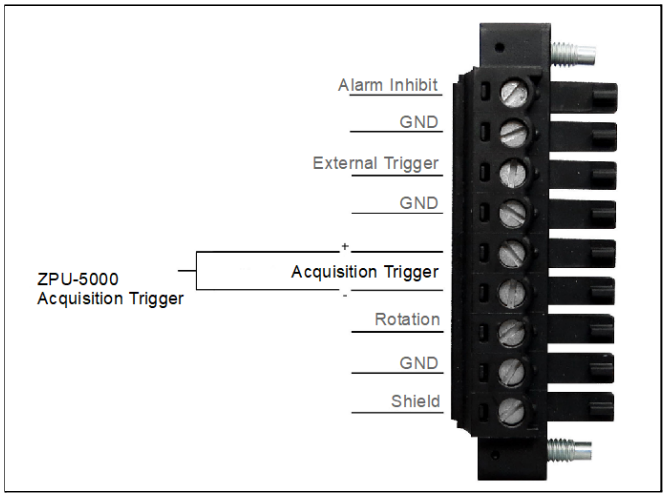

3. **Acquisition Trigger**: a bi-directional port used to allow a master ZPU-5000 unit equipped with an air gap sensor to share a 1/pole reference signal to slave ZPU-5000 units not equipped with an air gap sensor.

   This is all configurable in the ZPU-5000's properties with the help of ZOOM Configuration.

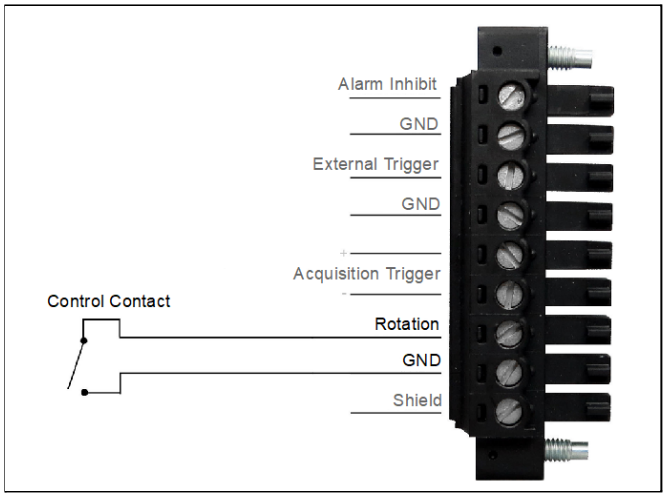

4. **Rotation**: an input used to indicate the unit's rotation direction (pumped-storage units) and select the appropriate synchronization probe. A more precise configuration is possible in **ZOOM Configuration**
   - Input type: 10 kΩ pull up resistor to 24 Vdc;
   - Control Type: dry contact or electronic switch.
     Control contact: open = SYNCHRO 2 IN;
     Control contact: closed = SYNCHRO 1 IN.
   - Voltage threshold: 3.7 V.

2.3.4 Relay driver outputs

This set of outputs is used to drive relays and keep the user informed about system events such as System OK and Channels OK. The illustration below shows a configuration with multiple ZPU-5000 acquisition units.

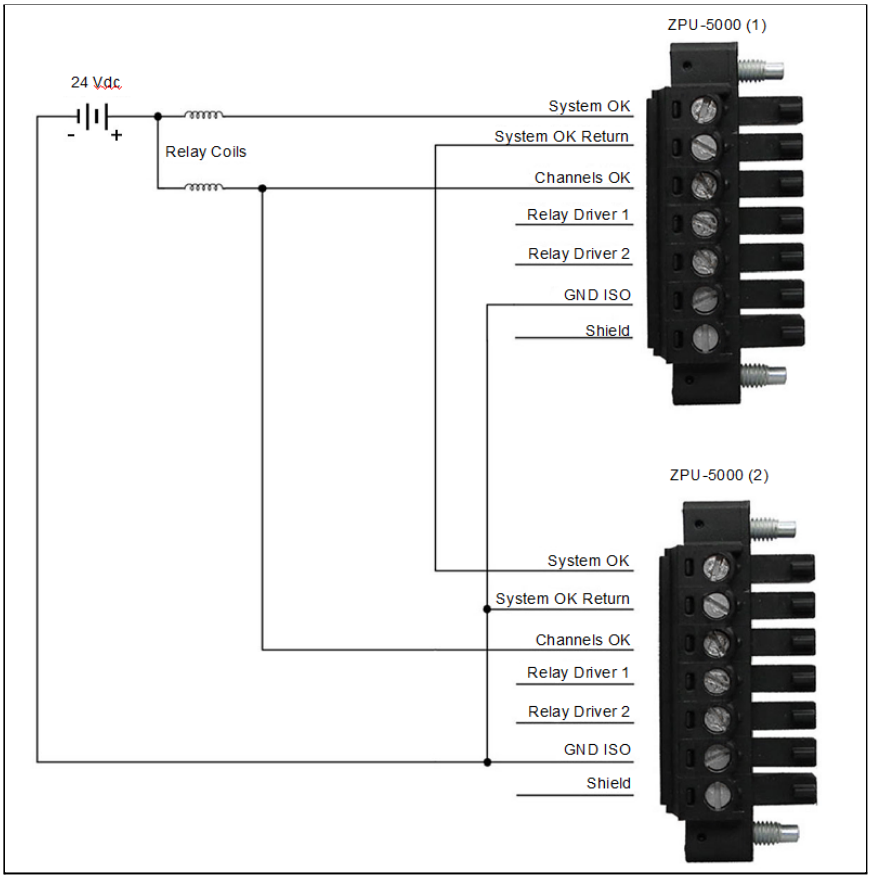

Note: Relay drivers 1 and 2 are available for optional configurations using the ZOOM software.

- Output type: Bipolar FET, ± 30V / 25 mA max. isolated ground;
- Output state:

  Transistor **OFF** = no alarm

  Transistor **ON** = alarm detected

2.4 Communication module

Wiring Connections

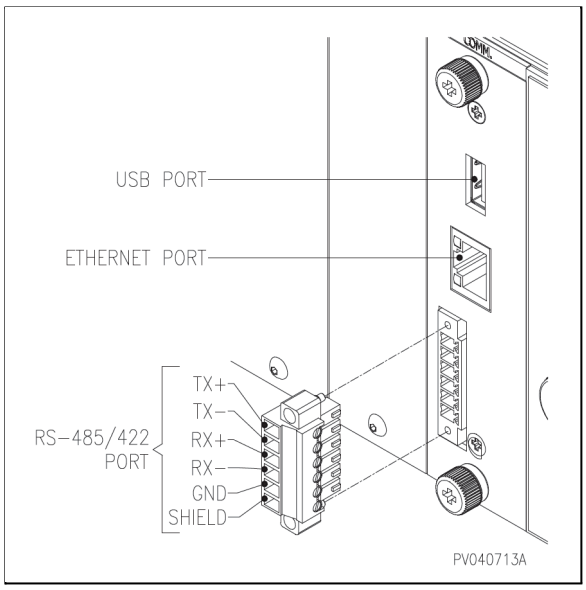

2.4.1 USB Port

The USB port allows connection of a portable storage device to copy the configuration or to update the firmware.

2.4.2 Ethernet Port

A 10/100 Mbps port for communication with the ZOOM software through a CAT6-E cable (recommended).

2.4.3 RS-485/422 Port

The user can choose between half-duplex (RS-485) or full-duplex (RS-422) communication with TWS and RTU protocols directly in the ZOOM Configuration software. A hardware configuration is also required via the COMM-100 module by changing the ON and OFF jumpers as illustrated below:

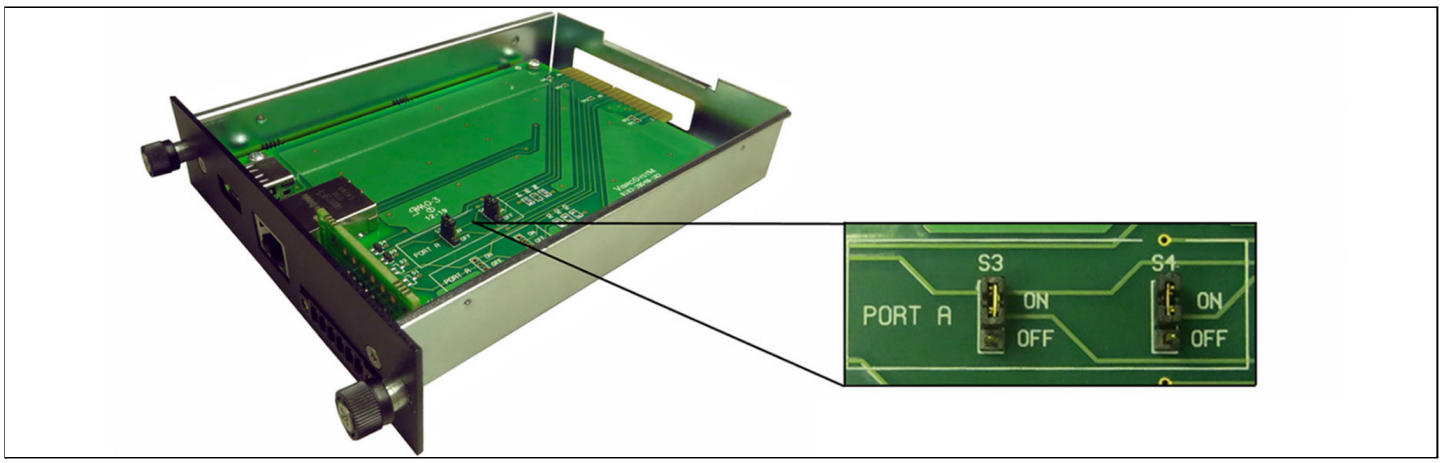

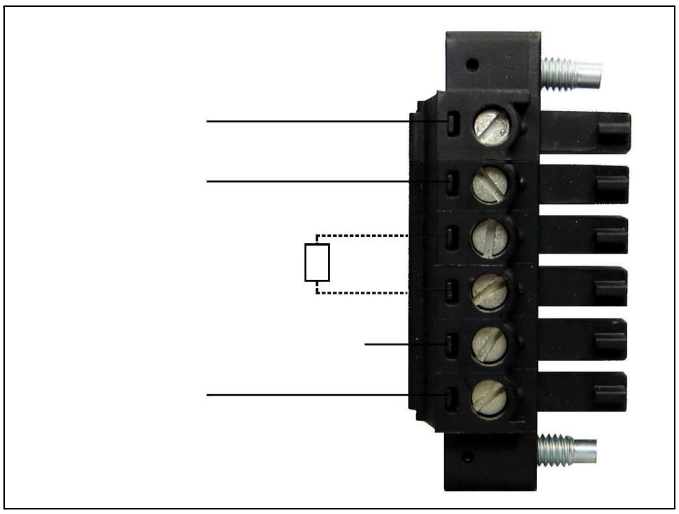

RS-485 in half duplex mode, typical connection.
Note: Jumpers S3 and S4: **ON**

Important Information

- 120 Ω termination resistor is only installed on the LAST UNIT of a chain.

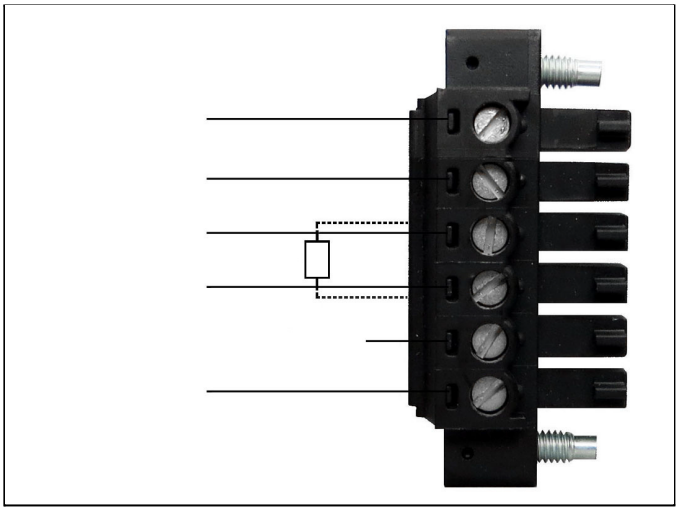

RS-422 in full-duplex mode, typical connection.
Note: Jumpers S3 and S4: **OFF**

Important Information

- 120 Ω termination resistor is only installed on the LAST UNIT of a chain.

Important Information

- Modules are shipped with S3 and S4 jumpers in the ON position (RS-485), and a 120 Ω termination resistor installed.

3. OPERATION

Once the unit has completed its boot-up sequence and starts running in **Monitoring** mode, press the **MENU** button to toggle between **Monitoring** and **Menu** modes. The Menu mode gives access to the configuration menu for reviewing or changing the unit's configuration parameters.

3.1 Startup (boot-up sequence)

When power is applied, the ZPU-5000 searches its internal memory for stored firmware and the last configuration information used. When required, a modified configuration or additional firmware can later be uploaded from the ZOOM server, or imported from a prepared USB key. The entire boot-up sequence can last up to 2 minutes.

1. When power is initially applied, the front panel display is blank and the front panel LED indicators display the initial colors:

   SYSTEM OK: Yellow

   CHANNELS OK: Yellow

   ALARM ACKNOWLEDGE: Orange

   CHANNELS ALERT / DANGER: Red

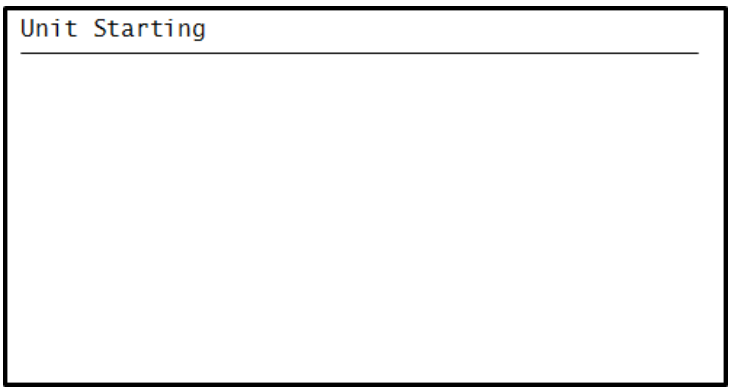

2. A message appears on the front panel display to announce the start of the boot-up sequence.

   The LEDs will change color as the boot-up sequence progresses.

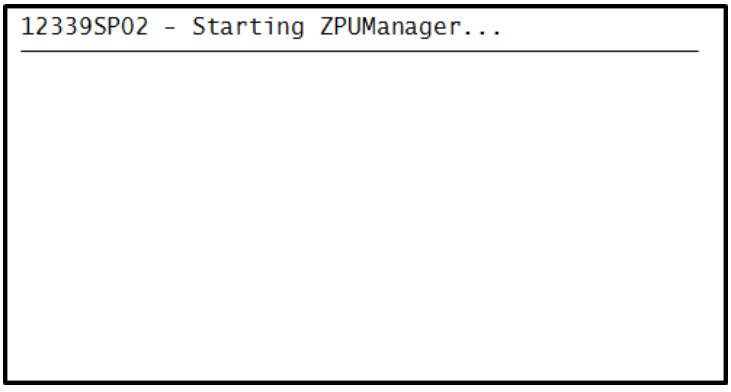

3. The ZPU-5000 address is displayed, and all applicable service plug-ins are started.

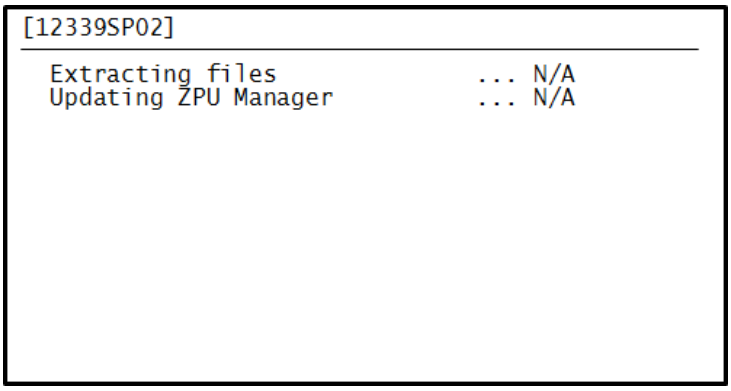

4. Square brackets around the ZPU-5000 network address indicate that the acquisition unit is not connected to the network yet.

   As the boot-up process continues, other screens are displayed to announce the update of the components in progress.

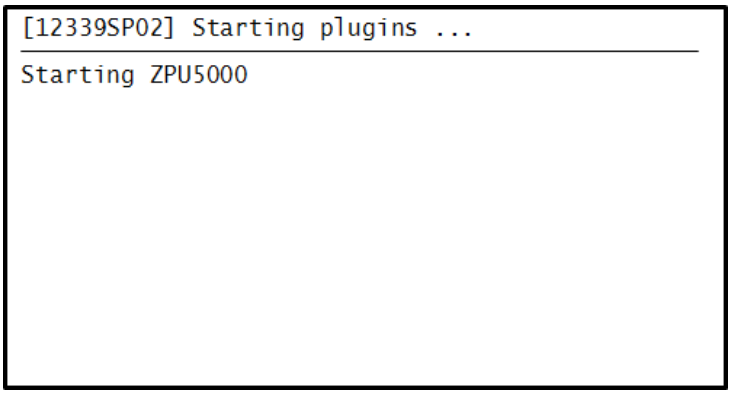

5. When the update of all plug-ins and firmware has completed, the ZPU-5000 starts.

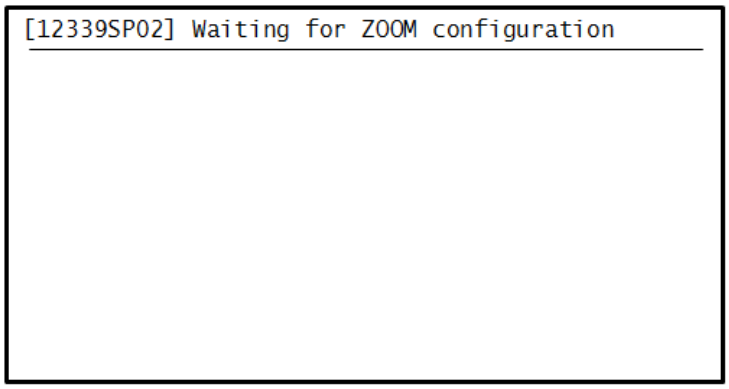

6. The ZPU-5000 unit uploads the configuration stored in its internal memory.

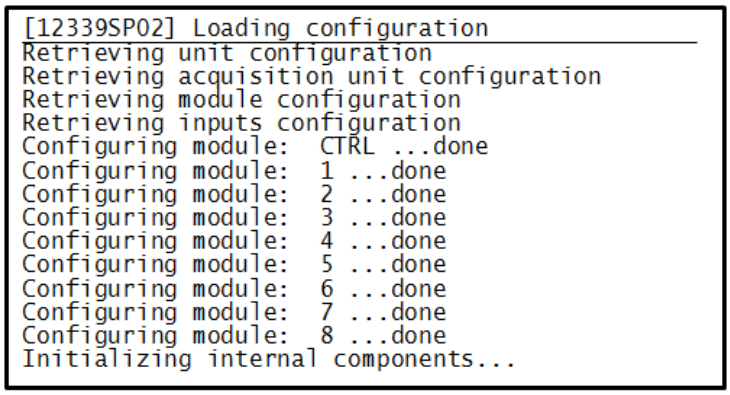

7. The configuration is loaded, and the components are initialized.

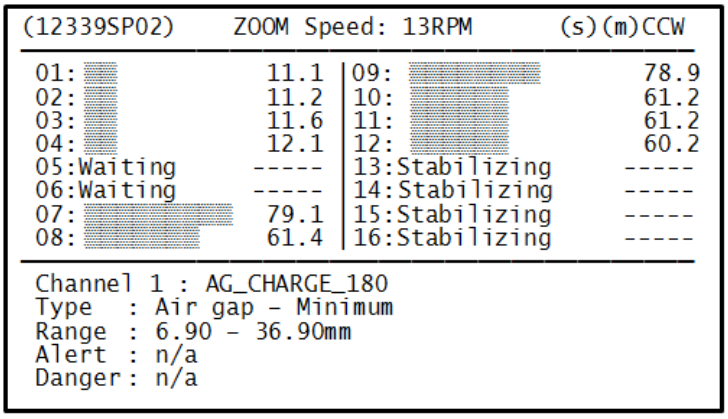

8. Finally, the ZPU-5000 starts normal operation, and the front panel display shows real-time information. Round brackets around the ZPU-5000 network address indicate that the acquisition unit is now connected to the network.

   The front panel LED indicators should now be:

   SYSTEM OK: **Green**

   CHANNELS OK: **Green**

3.2 Using the keypad

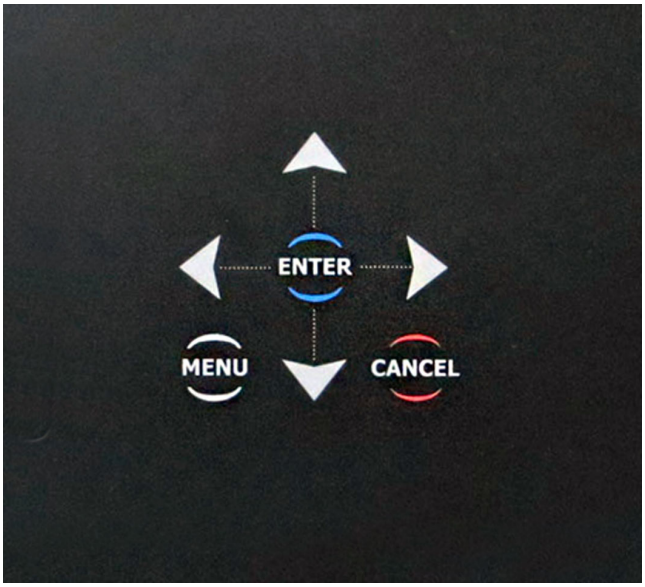

- The **ENTER** button is used to confirm a selection, move to the next menu level, or toggle a feature (enable/disable)
- The **CANCEL** button is used to move to the previous menu level, or to cancel a selection when a confirmation is requested.
- The four directional buttons emulate a pointing device, and are used for:
  - in Menu mode, browsing through the options in a menu and placing the cursor at a selected position for entering data;
  - in Monitoring mode, selecting a measuring chain and scrolling through the available monitoring displays and headers.

3.3 Overview of the display in monitoring mode

The illustration below illustrates a typical ZPU-5000 front panel display during normal operation.

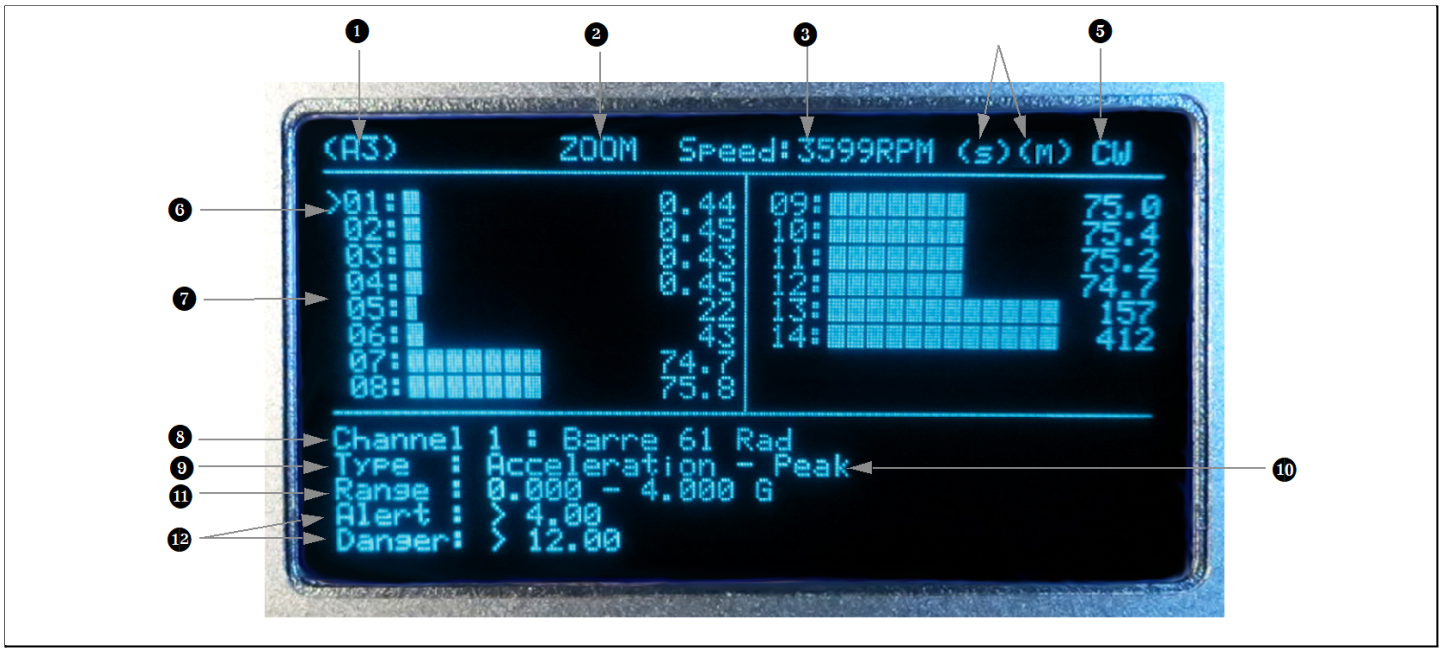

1) The address allows quick validation of the connection to the network and the server. The address can be made up of 2 or 9 characters. The 9-character serial number of the ZPU-5000 is often used to identify the unit. Unlike a 9-character address which is fixed and cannot be modified, a 2-character address can be changed for either another 2-character address or a 9-character address.

   (00000XX00) The acquisition unit has received an IP address and is connected to ZOOM Server;
   [00000XX00] The acquisition unit has an IP address but is not connected to ZOOM Server;
   00000XX00 The acquisition unit does not have an IP address and is not connected to ZOOM Server.

2) Indicates if the unit is connected to the ZOOM network or is in standalone mode.

3) Rotational speed of the monitored unit in RPM.

4) Status flags for the synchronization probe and modulation signal:

   (s) = A synchronization probe is detected;

   (m) = A modulation signal is detected (moving poles).

5) Rotational direction of the monitored unit: CW = clockwise, CCW = counterclockwise.

6) Indicates the cursor used to toggle between channels. Channel information is displayed at the bottom of the screen. Pressing ENTER gives access to the sensor's additional parameters (spectral bands, air gap).

7) Indicates the status of each input. Depending on the number of modules installed, the table can contain up to 16 inputs. A moving bar graph displays a real time visual cue of the present value. Each half bar represents 8% of the total range.

8) Indicates a channel name assigned by the user in the ZOOM Configuration software. The description may contain up to 32 characters, however only the first 28 characters are displayed.

9) Indicates the input parameter type associated with this sensor.

10) Indicates processing selected for the sensor, if any.

11) Indicates the configured trending and alarm range.

12) Alarm levels (single threshold, or lower and upper thresholds) set for this input channel.

3.3.1 View spectral band parameters

The CIM-4/20, ICPM-1.13, FIM-40-100, ICPM-5.65-500, and FIM-40-100(LF) acquisition modules can be programmed with spectral analysis firmware designed for monitoring specific frequencies and protecting fixed components on large rotating units. These modules perform high speed acquisition for advanced analysis as well as alarm surveillance on either a broadband frequency range or specific, user-selected spectral bands.

Pressing ENTER on a channel will display the sensor's spectral band parameters.

Important Information

- Spectral band values are only displayed if the vibration option has been selected in the module configuration window of the ZOOM Configuration software. A firmware is then automatically installed on the module.

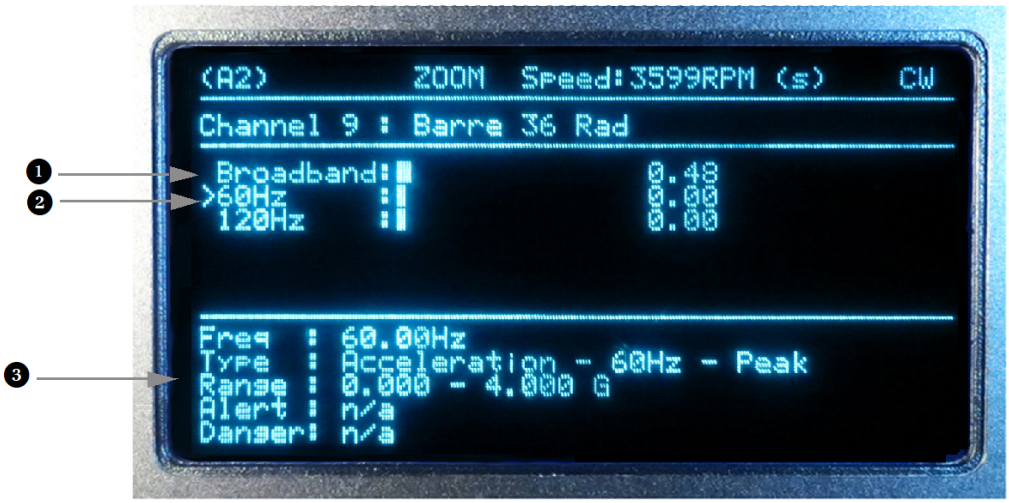

1) Displays broadband values for a given sensor.

2) Displays spectral band values for a given sensor. Represents amplitude in correlation with frequency. Up to 5 different spectral bands can be observed.

3) The information that appears in this section reflects which band has been highlighted with the cursor: broadband or spectral band. This window is also available if the parameter is not configured for spectral band surveillance, however, only broadband values will be displayed.

3.3.2 View air gap parameters

Pressing **ENTER** on an AGM-4/20 channel will display the sensor's minimum air gap value, and if programmed, the maximum rotor pole variation over one turn.

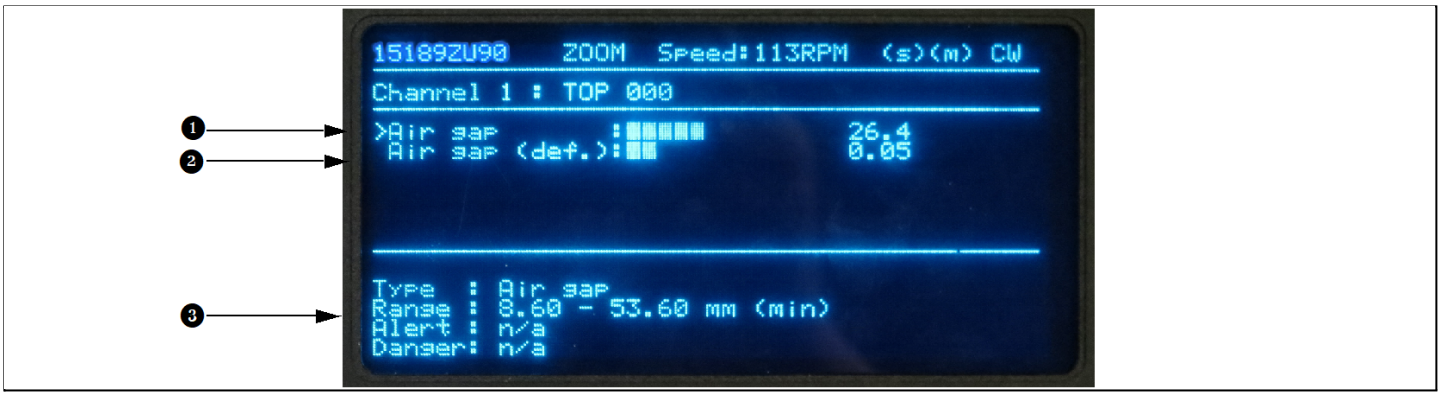

The AGM-4/20 acquisition module can be programmed to trigger two types of alarms on air gap measurements.

1) Air gap value (alarm on minimum air gap)
2) Average air gap variation (alarm on rotor deformation)
3) The information that appears in this section reflects which air gap measurement has been selected with the cursor: minimum air gap, or rotor deformation.

A base reference measurement is used to calculate the threshold values for each rotor pole. An alarm on rotor deformation is triggered when the air gap of at least one rotor pole exceeds the threshold value set for that pole in the reference measurement.

When an alarm is triggered, the bar graph is displayed in high luminosity, and the message Alert or Danger is displayed on the right of the value.

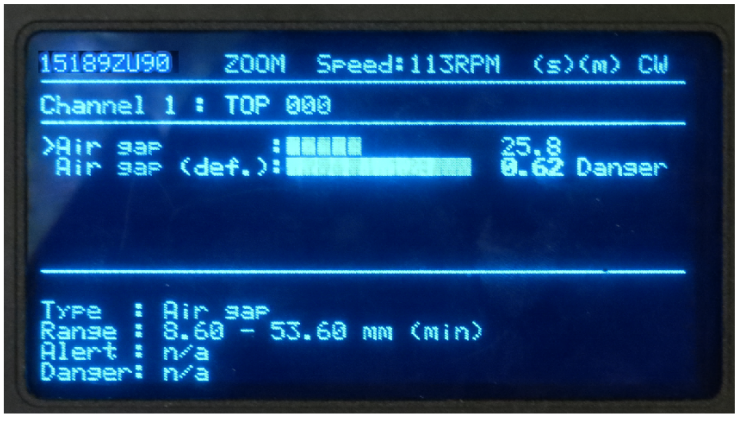

3.4 Overview of the options in the Menu mode

The menus are organized in a tree structure, with main options leading to sub-menus.

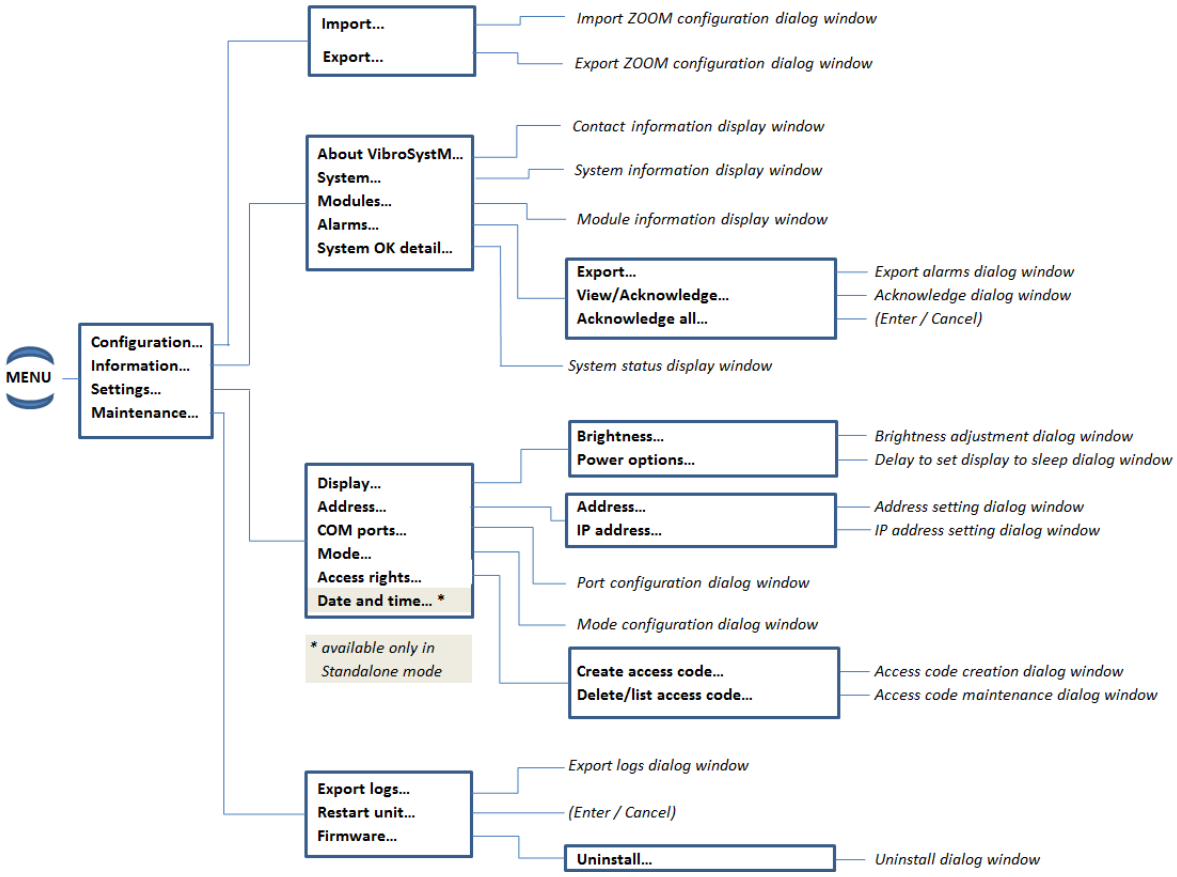

The following are directions on how to browse through the menus and execute various commands after pressing on the **Menu** key. Use the tree structure as a reference.

Important Information

- If access rights have been assigned, only users who have an Admin access code can access all the commands in the menu. See: 3.4.16 Create access codes and attribute access rights

3.4.1 Import a configuration

- Select **Configuration → Import**

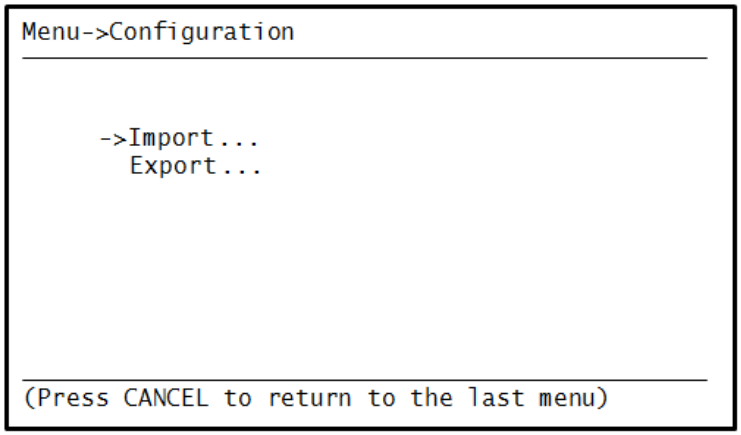

To import a configuration, you will be prompted to insert a USB key. This USB key, previously prepared either on a VSM server or workstation with the ZOOM Configuration command **File > Export** or prepared on another ZPU-5000 unit with the **Configuration → Export** command, must contain a valid .zcdb file. The ZPU-5000 unit automatically reboots after the import of a configuration is completed.

3.4.2 Export a configuration

- Select **Configuration → Export**

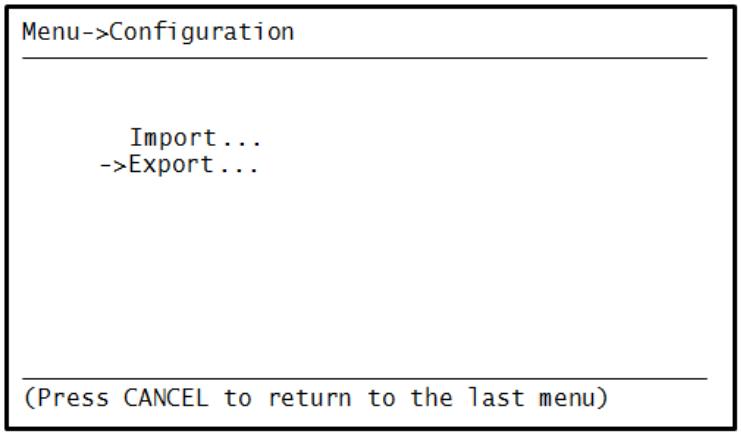

You will be prompted to insert a USB key to export a configuration.

3.4.3 View information about VibroSystM

- Select **Information → About VibroSystM**

This screen displays VibroSystM contact information.

3.4.4 View the ZPU-5000 system information

- Select **Information → System**

This screen shows information about the ZPU-5000 unit.

3.4.5 View the modules information

- Select **Information → Modules**

This screen displays information about the operation of various modules in the form of a table.

3.4.6 Export alarms

- Select **Information → Alarms → Export ...**

You will be prompted to enter a USB key and press ENTER. Follow the instructions displayed on the front panel by the automatic assistant.

3.4.7 View or acknowledge alarms

Important Information
• The View/Acknowledge and Acknowledge All tabs only appear when alarms have been triggered. If no alarms are triggered, only the Export Alarms tab appears.

- Select **Information → Alarms → View/Acknowledge**

This command displays a list of active alarms.
Use the up or down arrow to select an alarm, and press ENTER to view the details of this individual alarm.
Press ENTER to acknowledge the alarm.

3.4.8 Acknowledge all alarms

- Select **Information → Alarms → Acknowledge All**

This screen allows the user to acknowledge all active alarms in a single operation by pressing ENTER.

3.4.9 View System OK information

- Select **Information → System OK Detail**

This screen gives you an explanation on a **SYSTEM NOT OK** status.
If **SYSTEM OK** only is displayed, then the system is operating normally.

3.4.10 Adjust the front panel brightness

- Select **Settings** → **Display** → **Brightness**

This screen provides a way to change the brightness level.

3.4.11 Change the power saving option

- Select **Settings** → **Display** → **Power Options**

This menu allows setting a delay after which the front panel display turns off automatically to save power.
By default, the display is always powered on. Use the left or right arrow to change the setting from Never to a maximum delay of 25 minutes.
Once the display has turned off, you can turn it back on by pressing on any key.

3.4.12 Attribute a unit address

Important Information
• The unit must be rebooted after changing these parameters.

- Select **Settings** → **Address**

Select the Address option to assign an address for the ZPU-5000 unit
Use the right or left arrow key to position the pointer, and use the up or down arrow key to change the selected character.

3.4.13 Change the IP address protocol (enable or disable DHCP)

Select the IP address option to enable or disable Dynamic Host Configuration Protocol (DHCP).
By default, DHCP is enabled.
When DHCP is disabled (set to No), three additional parameters appear:

- Static IP address
- Subnet Mask
- Default Gateway

These additional parameters can be edited with the keypad. For more information regarding DHCP, please contact your network administrator.

3.4.14 View or edit communication port settings

Important Information
• On newer units (9183-06G00-21x and up), the **COM ports** option does not open, even if a plug-in is installed. No modifications can be made from the ZPU-5000. • On older units (9183-06G00-20x), the COM ports option opens, allowing the user to modify the configuration.

- Select **Settings → COM Ports**

In the COM ports screen, use the keypad to change the communication module configuration to RS/485 Half Duplex, or RS/422 Full Duplex.

3.4.15 Select the Network or Standalone mode

- Select **Settings → Mode**

Define in which mode the ZPU-5000 will operate. by pressing **ENTER**. The unit must be restarted after selecting the desired mode.

- Select **Connected to the ZOOM system** when the ZPU-5000 is connected to a network and is managed through the ZOOM software.

- Select **Standalone, not connected to ZOOM** when the ZPU-5000 is not connected to a server.

3.4.16 Create access codes and attribute access rights

By default, the ZPU-5000 acquisition unit offers unrestricted access to any command on the menu. If you need to restrict access to some command sequences, use the Create Access Code command. After access codes are created, only users with an access code and an Admin access right have unrestricted access.

The following table shows which operations (sequences of commands) are accessible to users according to their access right, when access is controlled by an access code:

Operation	Admin	Guest
Configuration → Import	**Yes**	
Configuration → Export	**Yes**	**Yes**
Information → About VibroSystM	**Yes**	**Yes**
Information → System	**Yes**	**Yes**
Information → Modules	**Yes**	
Information → Alarms	**Yes**	
Information → System OK Detail	**Yes**	
Settings → Display	**Yes**	**Yes**
Settings→ Address	**Yes**	
Settings → COM Ports	**Yes**	

Settings → Mode	**Yes**	
Settings → Access rights	**Yes**	
Maintenance → Export Logs	**Yes**	**Yes**
Maintenance → Restart Unit	**Yes**	**Yes**
Maintenance → Firmware	**Yes**	

The first four-digit access code must be assigned with an Admin access right (access to all the commands), after which various Guest users with restricted rights can be added.

The sequence of commands to create a new access code and a selected access right is as follows:

- Select **Settings → Access Right → Create Access Code**
- Select →**Access code**
- Use the arrows to enter a four digit code, press the **ENTER** key, and press **CANCEL** to return to the previous menu
  (The allowed characters for the four-digit access code are: 0 to 9, a to z, and A to Z)
- Select →**Access right**
- Use the arrows to select either **Admin** or **Guest**, press the **ENTER** key, and press the **CANCEL** key to return to the previous screen
  (If you are creating the first access code, the Access right is already set to Admin; skip to the next step)
- Select → **Validate & save**, and press the **ENTER** key.

After you have entered new access rights, you must restart the ZPU-5000 unit.

3.4.17 View or delete existing access codes assigned to users

- Select **Settings → Access Rights → Delete/List Access Codes**

Open this screen to view existing users, and delete them if needed by pressing **ENTER**.

3.4.18 Export log files

- Select **Maintenance → Export Logs**

  This screen prompts you to insert a USB key to export log files.

3.4.19 Restart the unit

Important Information
• Before restarting the unit, read all warnings that appear on the front panel display.

- Select **Maintenance → Restart unit**

Open this screen to restart the unit by pressing **ENTER**.

3.4.20 Uninstall the firmware

- Select **Maintenance → Firmware → Uninstall**

Use the up or down arrow to select a firmware, and delete it from the configuration by pressing **ENTER**.

3.5 Firmware update to version 7.4 with a prepared USB key

Important Information
• A USB key with firmware update information must be prepared, using the ZOOM Update program • This procedure applies only for first-time update to version 7.4

Insert the USB key containing the new firmware update into the USB port. Several elements may be updated. Except for the module firmware update, which takes several minutes to complete, all modifications are completed in just a few seconds. Messages are displayed during the update of the firmware to show the operation's progress.

1. First, insert the USB key. The SYSTEM OK LED will blink Yellow during the data transfer.

Caution
• Do not remove the USB key while the **SYSTEM OK** LED flashes Yellow

2. A screen shows the update progress. Once the data transfer is completed, the SYSTEM OK LED will turn Orange, and will remain this way until the USB key is removed.

3. Once the USB key is removed, the unit will display a message indicating that a reboot process has been initiated.

4. The update procedure starts by erasing the contents of the ZPU-5000 acquisition unit flash memory.

5. The next step consists of uploading the new firmware onto the module's flash memory. This operation takes 3 to 4 minutes to complete for each module.

⚠ Caution
• Do not disconnect the ZPU-5000 during the update process.

6. Once the operation is completed on a module, a message is displayed to confirm that the update was successful. If another module is installed, the updating program then continues with the next one.

7. Once all modules have been updated, the configuration is reloaded and the system starts to operate in monitoring mode.

4. CONFIGURING THE ZPU-5000 WITH ZOOM SOFTWARE

The properties of the ZPU-5000 unit, modules, and attached sensors can be edited through the ZOOM Configuration program. Read the contextual help supplied with the ZOOM software for more information. The two following sections are provided to explain how processing at module level.

4.1 Module firmware and spectral analysis processing

The CIM-4/20, ICPM-1.13, FIM-40-100, ICPM-5.65-500, and FIM-40-100(LF) acquisition modules can be programmed with spectral analysis firmware designed for monitoring specific frequencies and protecting fixed components on large rotating units.

4.2 Processes for Trend outputs

On most measuring chains, a type of signal processing is automatically applied on the trending output and cannot be changed.

On some measuring chains, the type of signal processing is selectable. For instance, with the parameter Velocity, the selected signal processing can be either RMS or Peak.

The eight types of processes that may be applied on the Trend outputs are:

Raw: The output signal from certain types of measuring chains includes both AC and DC components. Slow evolving parameters, such as temperature or meter levels, have an output signal with a slow DC component. In such cases, the raw signal value may be selected for an unprocessed signal.

Air gap / Blade tip: The minimum of each pole (or blade) is detected by the air gap pole detector. This detector does not have a finite window as it uses the signal's shape to find the corresponding minimum for each pole (or blade).

RMS: Some applications favor the use of RMS (Root Mean Square) values of acceleration and velocity readings for vibration measurements. The RMS value process uses only the AC component of the input signal.

Peak: Some applications favor the use of the peak value of acceleration and velocity readings for vibration measurement. The peak value process uses only the AC component of the input signal.

Peak-Peak: Some applications favor the use of the peak-to-peak value of displacement readings for vibration measurement. The peak-to-peak value process uses only the AC component of the input signal.

Maximum: Some applications require the maximum value measured by a sensor. The maximum process detects and returns only the maximum values during a predetermined time period.

Minimum: Some applications require the minimum value measured by a sensor. The minimum process detects and returns only the minimum values during a predetermined time period.

Average: Some applications require the average value measured by a sensor. The average process determines the average value during a predetermined time period.

5. TROUBLESHOOTING

If your ZPU-5000 unit is not operating as expected, verify the following tips, they should help you resolve most common issues.

5.1 Power supply

If the front panel LED indicators and display screen do not light up upon startup, verify the power supply.

First, read the voltage level at the rear of the unit with a portable meter. Make sure the unit receives recommended power from an AC source (100 to 240 VAC, 50-60 Hz).

- If the acquisition unit does not receive power, verify the source wiring, starting with the external circuit breakers protecting the unit;
- If the acquisition unit receives power, verify the fuse in the fuse-holder (at the rear of the acquisition unit).
- If the acquisition unit still fails to respond, contact VibroSystM for further assistance.
- If the LED indicators and front panel display do not turn on, a major power supply or main component failure has occurred. Contact VibroSystM for further assistance.

5.2 Boot-up

Verify the boot-up sequence by observing the LED indicators and front panel display. A normal startup can take up to 2 minutes. See section 3.1 Startup (boot-up sequence) for the correct boot-up sequence.

Verify the following:

- If the information on the front panel display does not match the front panel display screens shown in section 3.1 Startup (boot-up sequence), the firmware may be incorrect, and will need to be reinstalled.

5.3 Network connection

On the Communication module, at the rear of the unit, verify the two LED indicators on the Ethernet port:

- The bottom LED should light up to confirm the link to a 100 Mbps network.
- The top LED flashes when there is activity on the network.

For a valid connection to a TCP/IP network, each ZPU-5000 unit needs a unique IP address. Each ZPU-5000 unit receives an IP address either automatically, or manually with user intervention:

a) **Automatically, through DHCP**. The unit must be connected to a router or a server with Windows Server® to obtain its IP address;

b) **Manually, after disabling DHCP with the front panel keypad** (See section 3.4.13 Change the IP address protocol (enable or disable DHCP)).

- If the LEDs show no activity, open the System Status window in ZOOM Application, and verify the status of the ZPU-5000 unit and modules;
- If the IP address of the acquisition unit is assigned through DHCP, use the front panel keypad to confirm that an IP address was obtained from DHCP (See section 3.4.4 View the ZPU-5000 system information);
- If the IP address of the acquisition unit was entered manually, verify that the address does not already exist on the network, and that its parameters (mask and gateway) are correct;

- If the configuration includes more than one acquisition unit, verify that a unique IP address is assigned to each. The Unit address designating the equipment must also be unique. (See section3.4.12 Attribute a unit address).

5.4 Analog input/output modules

Verify the LED indicators at the rear of the analog input/output modules upon startup:

- The LED indicators at the rear of the modules should light up Orange for 2 seconds upon startup, then turn either Green or Red depending on the status of the measuring chain connected to the module.
- In some instances, it is normal for the LED to briefly turn Green before switching to Red.
- If the LED indicator at the rear of a module remains Orange, a firmware problem has been encountered and new firmware must be reloaded into the acquisition unit. See section 3.5 Firmware update to version 7.4 with a prepared USB key.

Verify, on the front panel display, that the status of each measuring chain confirms the color of the LED indicator color at the back of the corresponding analog input/output module. If a bar graph and a numerical value are displayed on the front panel display, then the parameter is correctly read.

Otherwise, verify the message associated with each channel:

- **NotOK**: an out of range problem has occurred. The LED indicator at the rear of the analog input/output module is Red. Verify the measuring chain installation.
- **NotOK(T)**: the configuration does not match the module type;
- **NotOK(F)**: the firmware version is incorrect. See section 3.5 Firmware update to version 7.4 with a prepared USB key
- **NotOK(A/D)**: the A/D card is not working. Contact VibroSystM.
- **NotOK(V)**: the configuration version does not match the software version;
- **NotOK (*)**: The module is not responding;
- **NotOK (C)**: there is a problem with the configuration;
- **Poles not OK**: rotor deformation cannot be monitored because the detected number of poles is incorrect
- **Speed not OK**: rotor deformation cannot be monitored because the unit is not operating within the required speed range (99% to 101% of nominal speed for hydroelectric alternators, or 1% to 200% of nominal speed for mills);
- **Stabilizing**: the sensor is connected but waits for the signal to stabilize before displaying a value;
- **Waiting**: the sensor is connected and the signal has been stabilized but the server has not completed its trending calculation cycle.

5.5 CTRL-100 module

Verify the LED indicator at the rear of the control module upon startup:

- The LED indicator should turn **Green** for 2 seconds, blink three times, then flash a short pulse each time the ZPU-5000 receives the synchronization signal when the unit is in rotation. This confirms that the synchronization probe is present and operational.
- If the LED indicator at the rear of the module remains **Orange**, a firmware problem has been encountered and new firmware must be reloaded into the acquisition unit. See section 3.5 Firmware update to version 7.4 with a prepared USB key.